DOCUMENT: 120 HOISTCOM SINGLE HOIST OUTSIDE ELEVATOR SYSTEM

VERSION: 20160915 **MCKEE PRODUCTS ARE MADE IN THE USA**

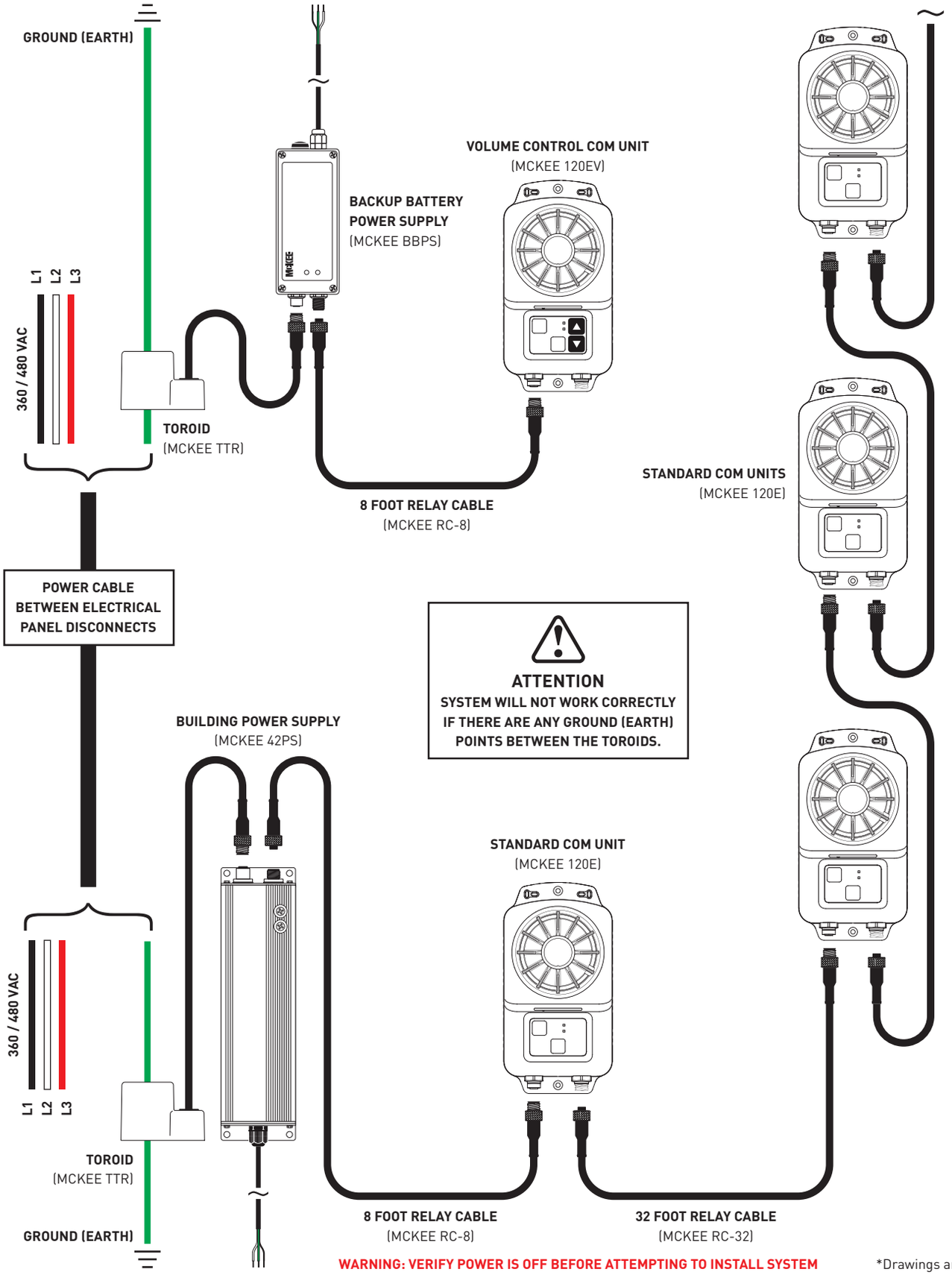

WARNING: VERIFY POWER IS OFF BEFORE ATTEMPTING TO INSTALL SYSTEM

*Drawings are not to scale.

USA & Canada: 800 321 4138 **International:** 805 684 7710 **Web:** mckeeusa.com **Email:** mckee@mckeeusa.com